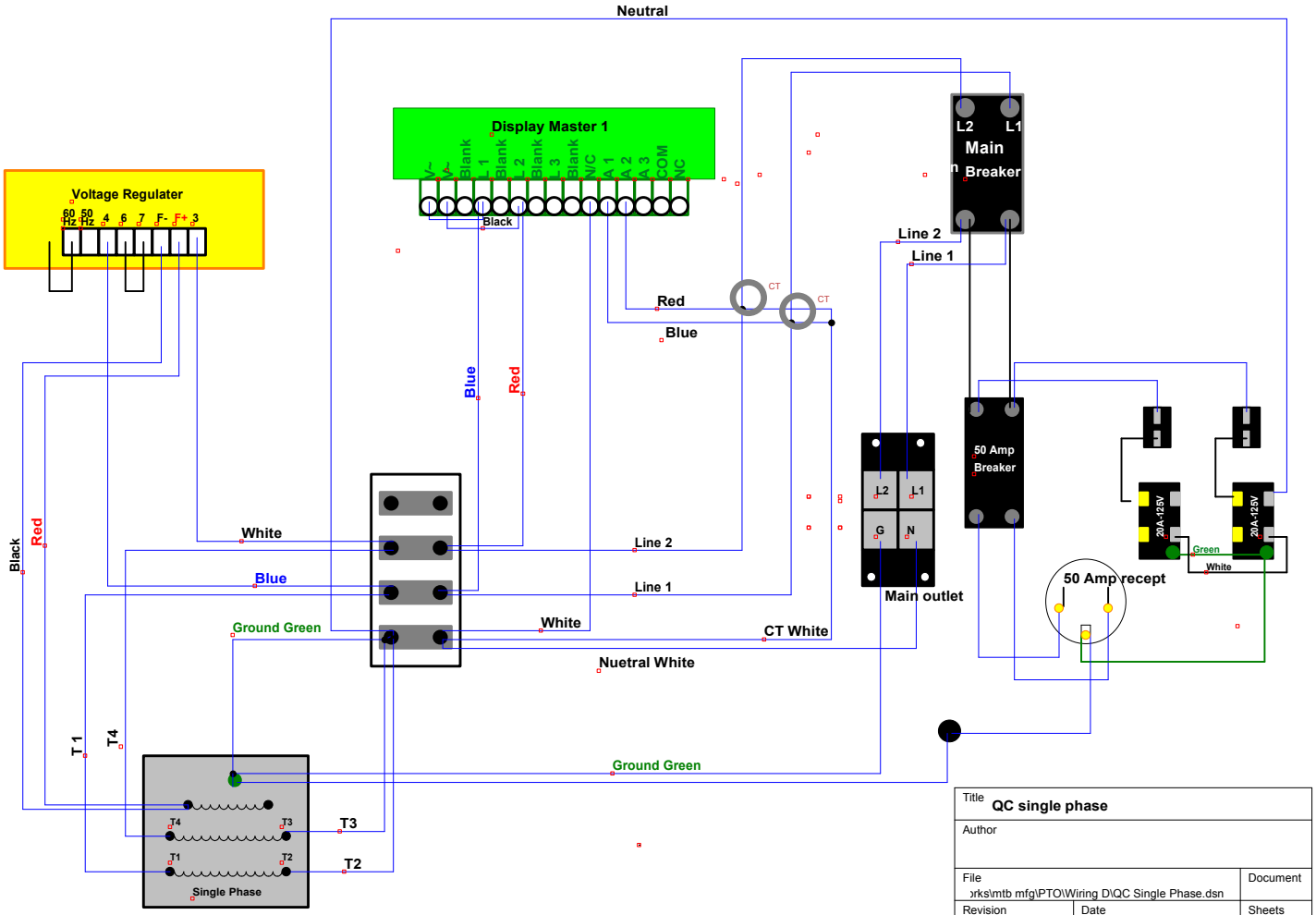

Title	QC single phase
Author	
File	›rks\mtb mfg\PTO\Wiring D\QC Single Phase.dsn
Document	
Revision	1.0
Date	
Sheets	1 of 1